PRODUCT INFORMATION PACKET

Model No: 5KC36LN1X
Catalog No: 5KC36LN1X
General Purpose Motor, 0.33 HP, 1 Ph, 60 Hz, 115/208-230 V, 1800 RPM, 56 Frame, DP

Regal and Leeson are trademarks of Regal Rexnord Corporation or one of its affiliated companies.
©2024 Regal Rexnord Corporation, All Rights Reserved. MC017097E

Nameplate Specifications

Phase	1	Output HP	0.33 Hp
Output KW	0.25 kW	Voltage	115/208-230 V
Speed	1725/1425 rpm	Service Factor	1.35
Frame	56	Enclosure	Drip Proof
Thermal Protection	Automatic	Efficiency	62 %
Ambient Temperature	40 °C	Frequency	60 Hz
Current	6.0,3.2-3.0 A	Power Factor	0
Duty	Continuous	Insulation Class	B
KVA Code	M	Drive End Bearing Size	6203
Opp Drive End Bearing Size	6203	UL	Recognized
CSA	Yes	CE	N
Number of Speeds	1		

Technical Specifications

Electrical Type	Capacitor Start Induction Run	Starting Method	SM
Poles	4	Rotation	Counterclockwise/Clockwise
Mounting	Resilient Base	Motor Orientation	ANY
Drive End Bearing	BALL	Opp Drive End Bearing	Ball
Frame Material	Rolled Steel	Overall Length	10.32 in
Frame Length	6.22 in	Shaft Diameter	0.630 in
Shaft Extension	1.88 in		
Outline Drawing	52A101468P2	Connection Drawing	52A105383AA

This is an uncontrolled document once printed or downloaded and is subject to change without notice. Date Created:09/18/2024

SHEET | REV 14 | 52A101468 | DRAWING NO. | SIZE A

THIRD ANGLE PROJECTION

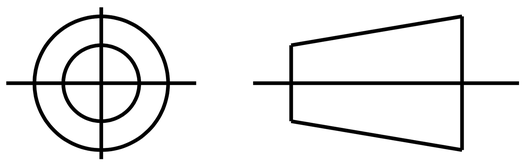

REVISIONS			
REV.	DESCRIPTION	DATE	APPROVED
11	REDRAWN NO CHNAGE T196-22390	07/10/96	MDP
12	ADDED PART 8 PER IS05-1139	05/12/05	RAJKUMAR.R
13	CHG TO RBC FORMAT PER IS 05-1777	12/15/05	GOVARDAN
14	ADDED GND.LD PER IS12-0707	02/24/12	KARTHIK

*W IS A CLEARANCE DUE TO VARIATION IN PARTS & ASSEMBLY.

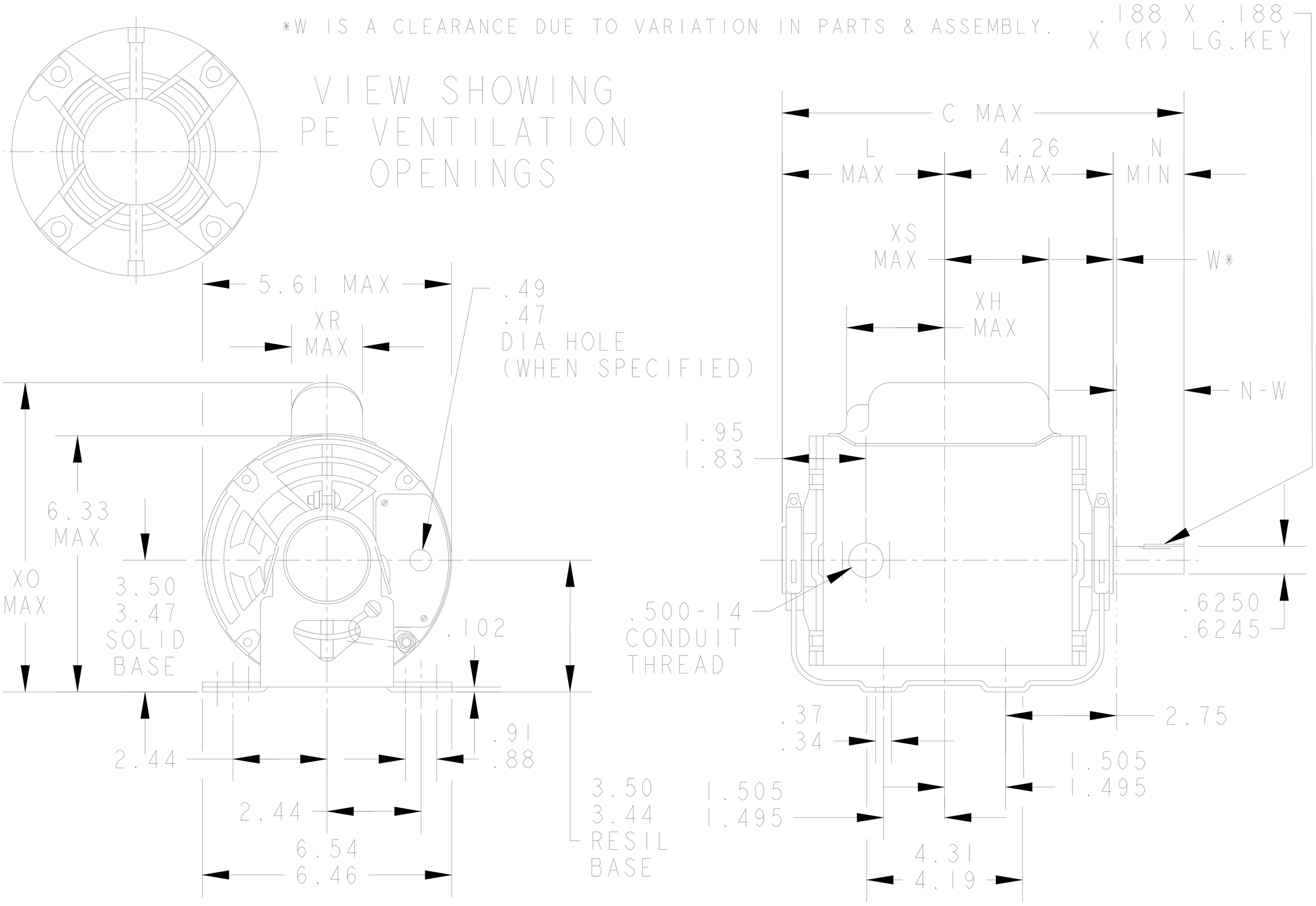

PT	TYPE	GE SIZE	NEMA FR	C	L	XH	XO	XR	XS	N	N-W	K	SHELL LGTH.
8	KC	38	56	11.32	5.23	2.90	8.43	2.22	2.87	1.88	2.01/1.79	1.38	
7	KC	38	56	11.32	5.23	3.65	8.43	2.22	2.12	1.88	2.01/1.79	1.38	
6	KC	39	56	11.85	5.76	3.45	8.43	2.22	2.32	1.88	2.01/1.79	1.38	7.75
5	KC	37	56	10.72	4.63	3.05	7.81	1.60	2.72	1.88	2.01/1.79	1.38	
4	KC	38	56	11.32	5.23	3.65	7.81	1.60	2.12	1.88	2.01/1.79	1.38	
3	KC	37	56	10.72	4.63	3.05	8.43	2.22	2.72	1.88	2.01/1.79	1.38	
2	KC	36	56	10.32	4.23	2.65	7.81	1.60	2.72	1.88	2.01/1.79	1.38	
1	KC	35	56	9.89	3.80	2.22	7.81	1.60	2.34	1.88	2.01/1.79	1.38	

SIGNATURES		DATE
MODEL	GLB	01/30/75
DETAIL	.	.
CHECKED	.	.
ENGRG	.	.
MFG	.	.
QUALITY	.	.
ISSUED	MDP	07/10/96

FOR ADDITIONAL INFO REFER TO:

APPLIED PRACTICES .

DIMENSIONS ARE IN INCHES

MATERIAL .

SOLID MODEL: 52A101468

REGAL BELOIT

REGAL-BELOIT CORPORATION

TITLE

OUTLINE

FORM N - GENERAL PURPOSE MOTOR - DRIP PROOF - SOLID OR RESIL BASE - BALL OR SLEEVE BEARING

SIZE A | DRAWING 52A101468 | REV 14

SCALE: 0.003 | REF. No: . | SHEET 1 OF 1

52A105383AA

EITHER ROTATION, DUAL VOLTAGE, TYPE KC OR KH, WITH THERMAL PROTECTION

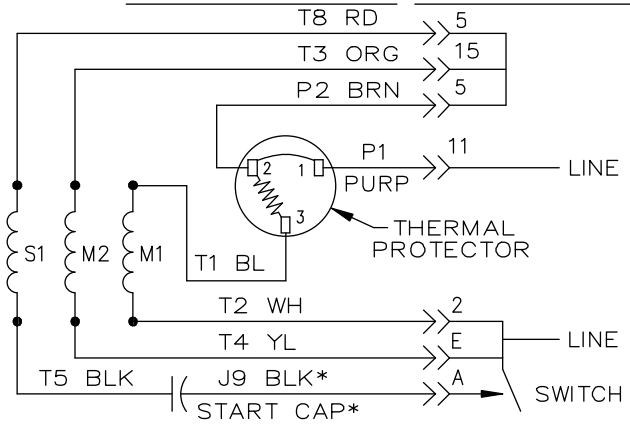

LOW VOLTAGE CONNECTION

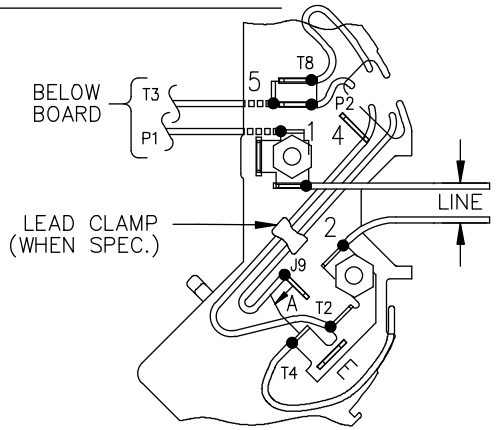

SWITCH BOARD CONNECTION

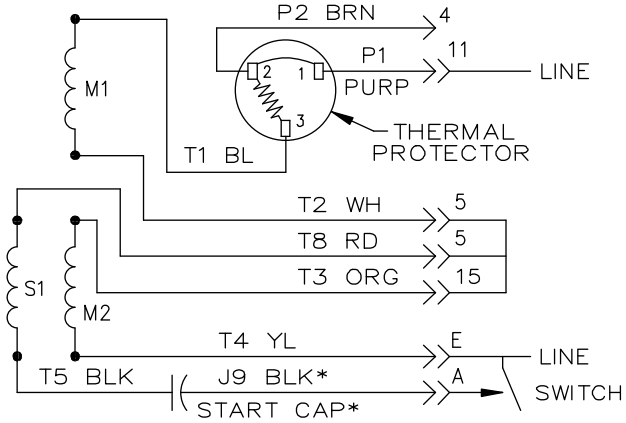

HIGH VOLTAGE CONNECTION

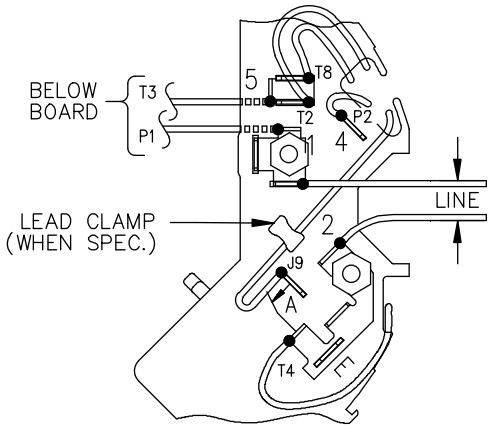

SWITCH BOARD CONNECTION

NOTE #1 – START CAP & J9 WHEN SPECIFIED (*). IF NO CAPACITOR (KH), CONNECT T5 DIRECTLY TO SWITCH (A). WHEN MORE THAN ONE CAPACITOR IS USED, CONNECT IN PARALLEL.

NOTE #2 – TO REVERSE ROTATION, INTER CHANGE RD(T8) AND BLK(J9–KC OR T5–KH) LEADS.

SWITCH REF. – 115D958AB	CONNECTION LABEL	CCW ROTATION: NP52X332051AA
		CW ROTATION: NP52X332051AC

NO.	REVISION	BY & DATE	CHK
5	ADDED CONNECTION LABEL PER ECO–0030779	UD 02/06/13	PKG
4	UPDATED PER IS07–0150	MD 01/23/07	

TOLERANCES UNLESS SPECIFIED

DEC.	INCHES
.X	±0.1
.XX	±0.02
.XXX	±0.005
.XXXX	±0.0005
ANG	±1.0

REGAL BELOIT — REGAL-BELOIT CORPORATION

TITLE: CONNECTION DIAGRAM
30 FRAME SWITCH REDESIGN

MAT'L.
FINISH
RFP
DIST
CAD FILE 52A105383AA

DRAWN M.D.P 06/29/87
CHK
APPD M.D.P 03/26/96
SCALE 1=1
REF
FMF
PREV

SIZE A | DRAWING NO. 52A105383AA | REV. 5

THIS DRAWING IN DESIGN AND DETAIL IS OUR PROPERTY AND MUST NOT BE USED EXCEPT IN CONNECTION WITH OUR WORK ALL RIGHTS OF DESIGN AND INVENTION ARE RESERVED
THIS IS AN ELECTRONICALLY GENERATED DOCUMENT – DO NOT SCALE THIS PRINT

2/6/2013 9:06:09 AM - Converted by Connexus